| REV | DATE | DESCRIPTION | ECO | SIGN |
|---|---|---|---|---|
| 1 | 12/17/01 | RELEASE TO PILOT | 1105 | RAB |
| | | | | |

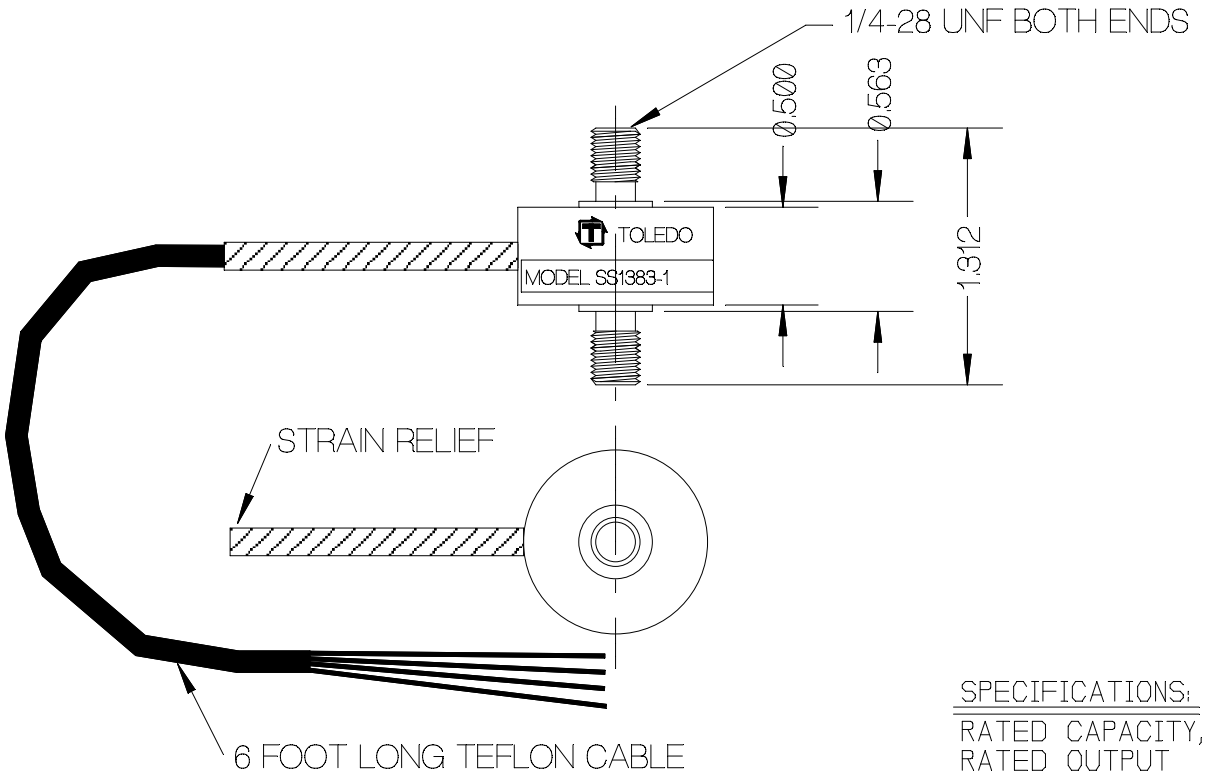


WIRE COLOR CODE:

| | |
|---|---|
| + EXCITATION | RED |
| - EXCITATION | BLACK |
| + SIGNAL | GREEN |
| - SIGNAL | WHITE |

SHIELD 1 OHM TO ELEMENT*

** REVERSE SIGNAL LEADS FOR + OUTPUT IN COMPRESSION.

*(DYNAMIC LOAD CELL USED WITH T.T.I. PRODUCTION / LOAD MONITOR.)

SPECIFICATIONS:

| | |
|---|---|
| RATED CAPACITY, +TENSION, -COMPRESSION** | 1,000 POUNDS |
| RATED OUTPUT | 2 mV/V typical |
| COMBINED ERROR | 0.25 % |
| NON-REPEATABILITY | 0.05 % |
| ZERO BALANCE | ± 1 % |
| TEMPERATURE RANGE, COMPENSATED | +14 TO 104° F |
| TEMPERATURE EFFECT, OUTPUT | 0.001 % / ° F |
| TEMPERATURE EFFECT, ZERO BALANCE | 0.05 % / ° F |
| INPUT IMPEDANCE | 350 OHMS, typical |
| EXCITATION VOLTAGE (typical) | 10 VDC or VAC rms |
| EXCITATION VOLTAGE, MAXIMUM | 15 VDC or VAC rms |
| INSULATION RESISTANCE | 5,000 MEG OHMS @ 50 VDC |
| MAXIMUM LOAD, SAFE | 150 % F.S. |
| MAXIMUM LOAD, ULTIMATE | 300 % F.S. |

| | | | | | |
|---|---|---|---|---|---|
| TOLERANCES UNLESS OTHERWISE SPECIFIED: .XXX = ± 0.005 .XX = ± 0.015 .X = ± 0.025 | SCALE: FULL | TOLEDO TRANSDUCERS, INC. | Designed By: Mettert | Date: 12/05/01 | Title / Description: SS1383-1KLB FATIGUE & IMPACT LOAD LOAD CELL SPECIFICATIONS | Part No. SS1383-1KLB |
| | | | Drawn By: | Date: | | File Name 12401SP.FCD |
| MAT'L: 17-4 PH STAINLESS STEEL HARDNESS: Rc 40-46 | | | Approved By: | Date: | Dwg.Size: A / Dwg. Type: SPEC / Page 1 of 1 | Doc. No. 12401 |